MAXALTO

Pathos bench

COMPLEMENTS

2008

Antonio Citterio

Description

The Pathos bench, with a quilted leather or fabric cover, is available in two sizes. Ideal in the dining room, it is also a handy additional seat or top in the living room and bedroom. Stylistically, it echoes the iconic X-shaped metal frame characterising the entire Pathos collection of tables and furnishings.

Technical information

Seat
multi-layered wood panel, shaped polyurethane, polyester fibre
Support frame
drawn steel
Ferrules
plastic material
Cover
fabric or leather

Technical drawings

SMP6

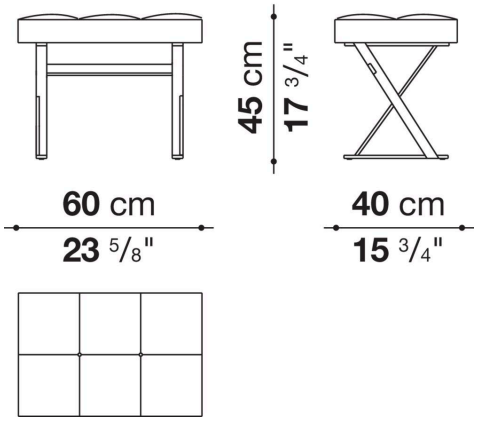
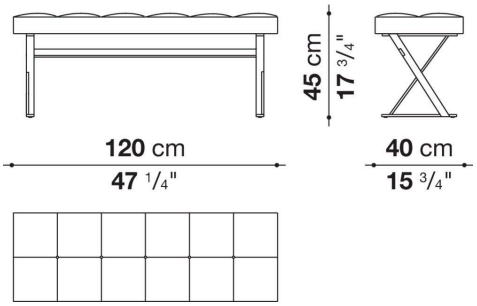
SMP12