MAXALTO

Febo

CHAIRS

2008

Antonio Citterio

Description

In addition to the Febo family there are the chairs in three versions: the first has classic and extremely comfortable proportions, the second is reduced in height so as to be paired with the tea tables and the last one has a high back and more enveloping lines. All the chairs are available both in a single material covered in fabric or leather with prominent blanket stitch or with wooden legs.

Technical information

Internal frame
tubular steel and steel profiles
Internal frame upholstery
Bayfit® flexible cold shaped polyurethane foam, polyester fibre cover
Legs
solid wood or covered in fabric or leather
Ferrules
thermoplastic material
Cover
fabric (blanket stitching) or leather (blanket stitching or raised stitching)

Technical drawings

2806T

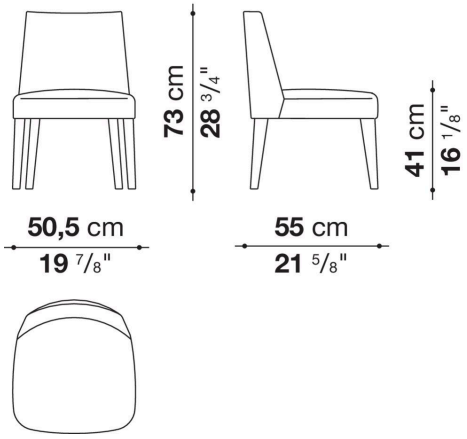

2804T

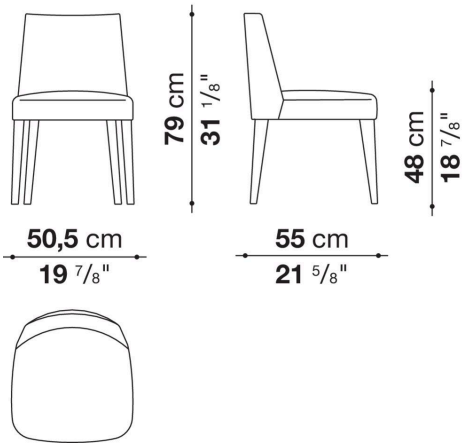

2808T

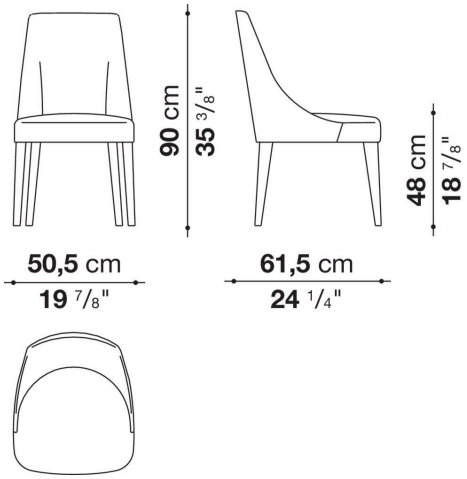

2846T

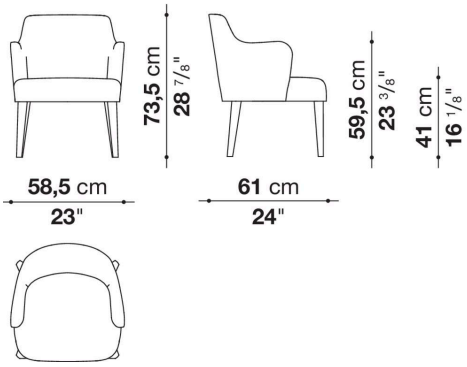

2844T

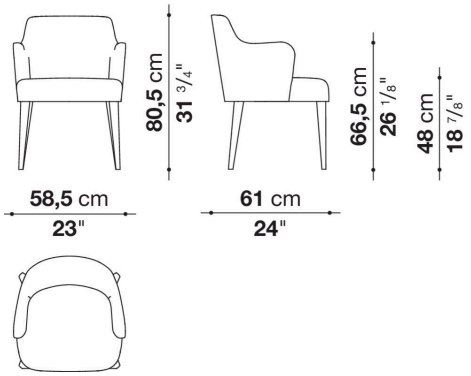
80,5 cm
31 3/4"
66,5 cm
26 1/8"
48 cm
18 7/8"
58,5 cm
23"
61 cm
24"

2836T

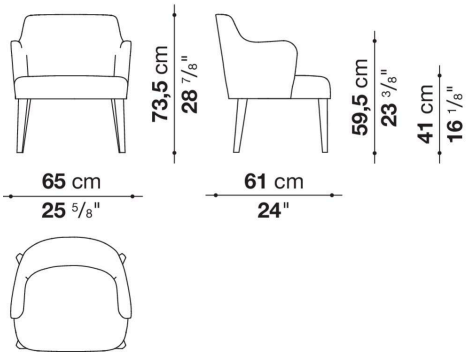
73,5 cm
28 7/8"
59,5 cm
23 3/8"
41 cm
16 1/8"
65 cm
25 5/8"
61 cm
24"

2834T

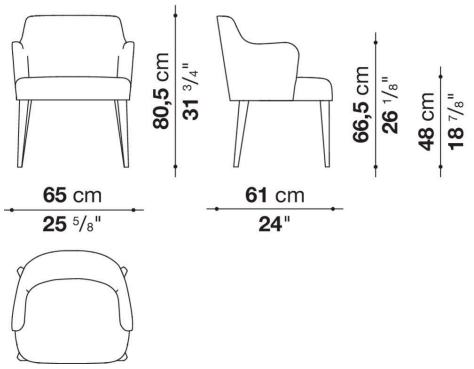

2806LT

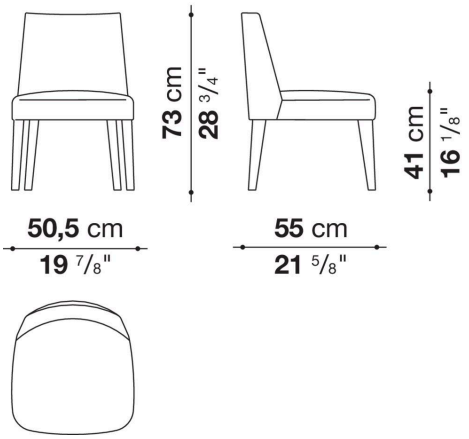

2804LT

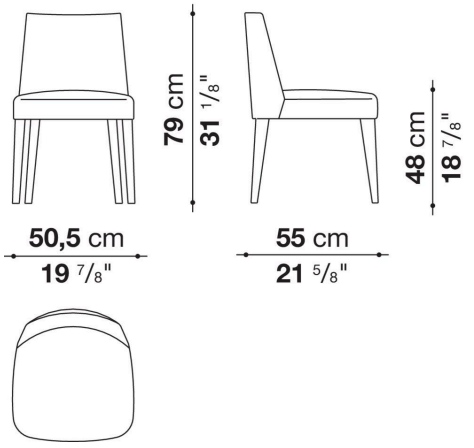

2808LT

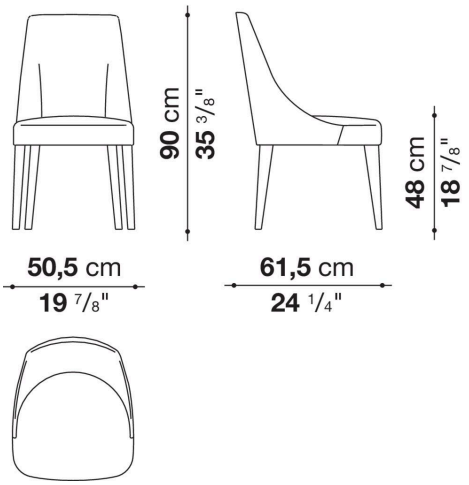

2846LT

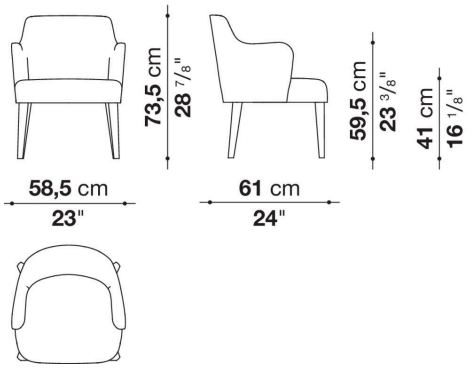

2844LT

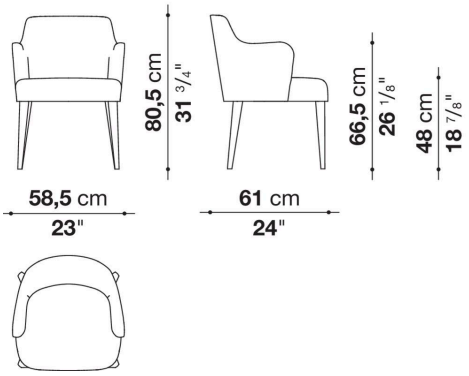

2836LT

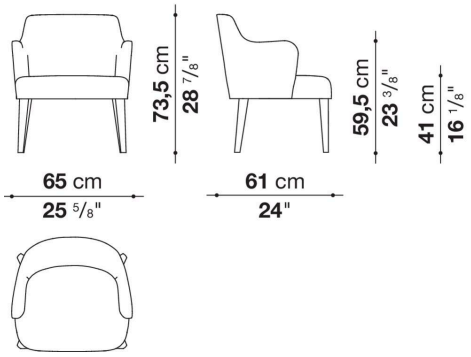
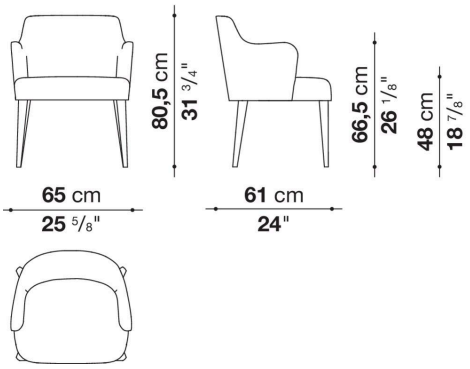
2834LT